FERRIWO

FWB1204

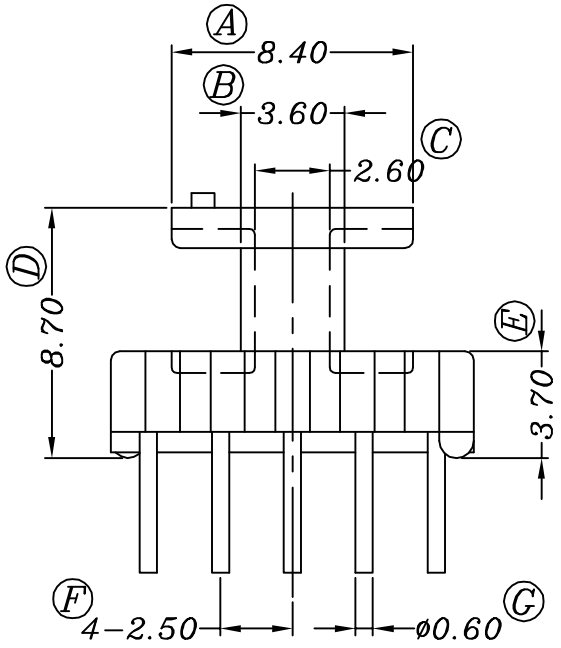

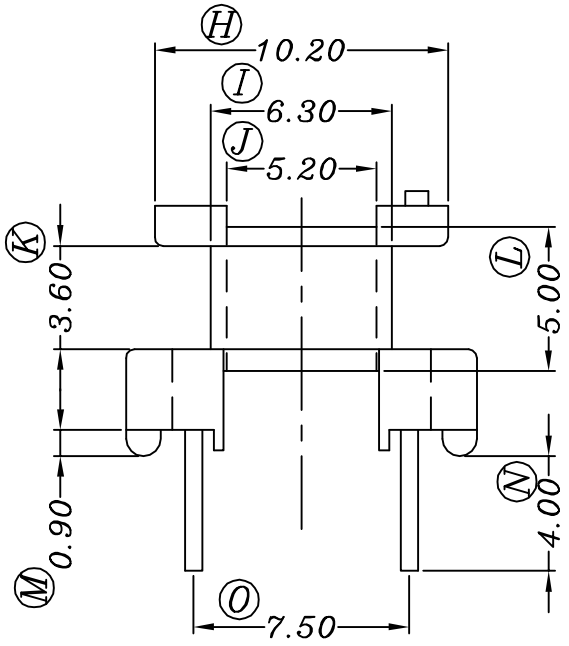

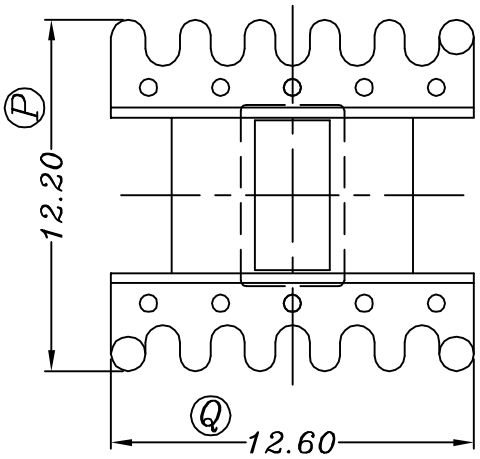

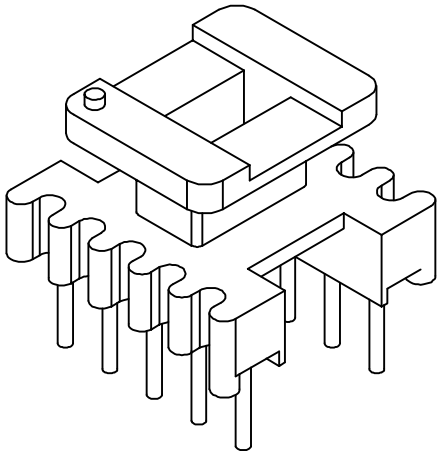

REV	REVISION RECORD	DATE	REV	REVISION RECORD	DATE
A			C		
B			D		

NAME	EI-12.5 (5+5P)	MATERIAL	PHENOLIC	SCALE	1.5/1	ANGLE	±1°
DRAWING NO.	FWB1204	PIN MATERIAL	CP WIRE	UNIT	m/m	REV	A
TOLERANCE OF PIN PITCH ±0.20			HAINING FERRIWO ELECTRONICS CO.,LTD.				
PIN TENION LOAD kg MIN		UL REC:94V-0	TEL: +86-573-87088701 FAX: +86-573-87081130				
TOLERANCE:0<L≤4:±0.2 4<L≤16:±0.3 16<L≤63:±0.4			Web: www.ferriwo.com Email: sales@ferriwo.com				